Work happily

DATA SHEET

08.2026

naggura'swop

naggura.com

Swop 5L Pro Physio

Physiotherapy

Dimensions

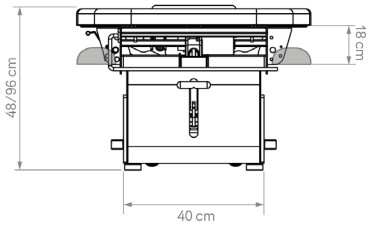

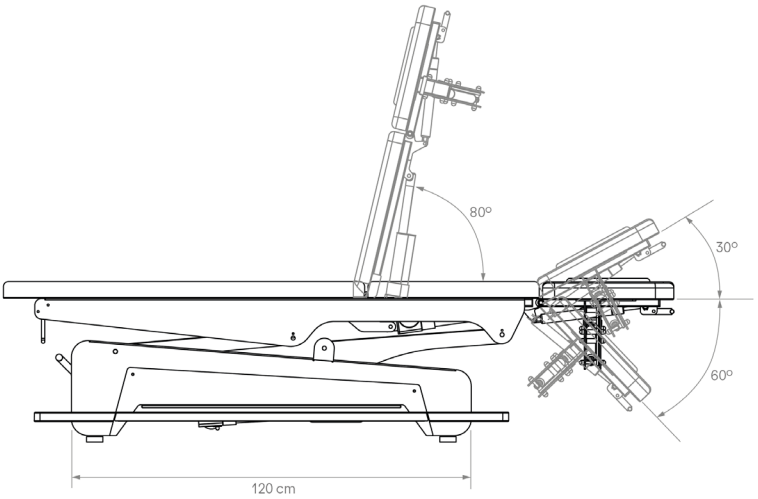

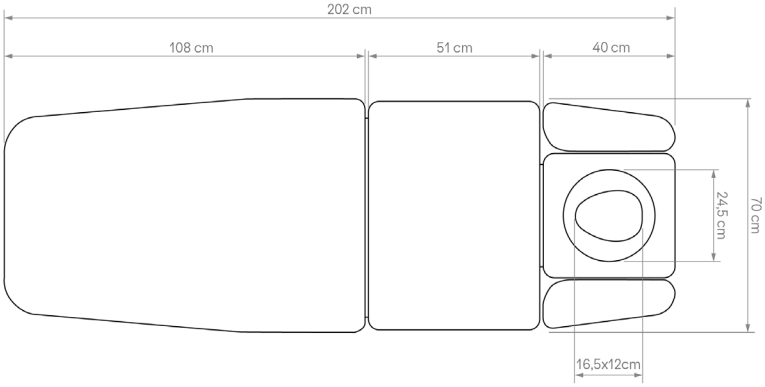

Swop 5L Pro Physio

Physiotherapy

General Specifications

MOTORS
1 engine height (6000N)
1 engine backrest section (6000N)

DIMENSIONS (LENGTH X WIDTH)
202 x 70 cm

HEIGHT (MIN. AND MAX.)
48/96 cm

WEIGHT
109 kg

LIFTING CAPACITY
200 kg

POWER SUPPLY
110-240 V - 50/60 Hz

FRAME COLOUR
Dark grey: RAL 7015
Light grey: RAL 7047

ISULATION CLASS
Class I

PRODUCT CLASSIFICATION
Class I Equipment

APPLIED PARTS
Type B

MOISTURE RESISTENCE
IPx0

FEEDER CABLE
3m, white

MOTOR SPEED
2,33cm/s

MAX INTENSITY
9A

Accessories

Bed Covers

Bamboo Sound System

Face+ integrated cushion (replacement part)

Operation

TwinLift arm supports: stepless and simultaneously adjustable with gas spring. No collision with the therapist.

Head section with 1 gas springs.

Swop 360º Height Control Ergonova System, easy access from all sides of the table.

4 wheels turning 360°. Fully integrated system underneath the base frame. 1 Central lever.

Electrically adjustable backrest section. Switches on both sides.

Ambient LED light.

Upholstery

Thickness: 5cm
Density: 40kg/m^3
Fully integrated Face+ seamless face cushion with plug (both in PUR).
Seamless upholstery with round edges.
Naggura Skin upholstery: PU compound.
Protection against germs and UV rays.
Superior abrasion resistance: >150K cycles.
Flame retardancy: BS 7176
Colour: Graphite

Safety

Safety switch with key.
Motor with safety clutch.

Warranty and conformity

WARRANTY
The metal frame comes with a 10-year warranty. All other components of the stretcher have a 2-year warranty. We also offer technical service with coverage throughout Spain, France, Italy, Germany, Belgium, and Portugal, guaranteeing fast and efficient assistance.

CONFORMITY
These products are manufactured according to the essential requirements established in the European Medical Devices Directive (Annex II+III of Regulation (EU) 2017/745).